Data Sheet

Article number: 29560104875220
Description: Shaft mounted gear
A102S-48,7-P63B5

Measures

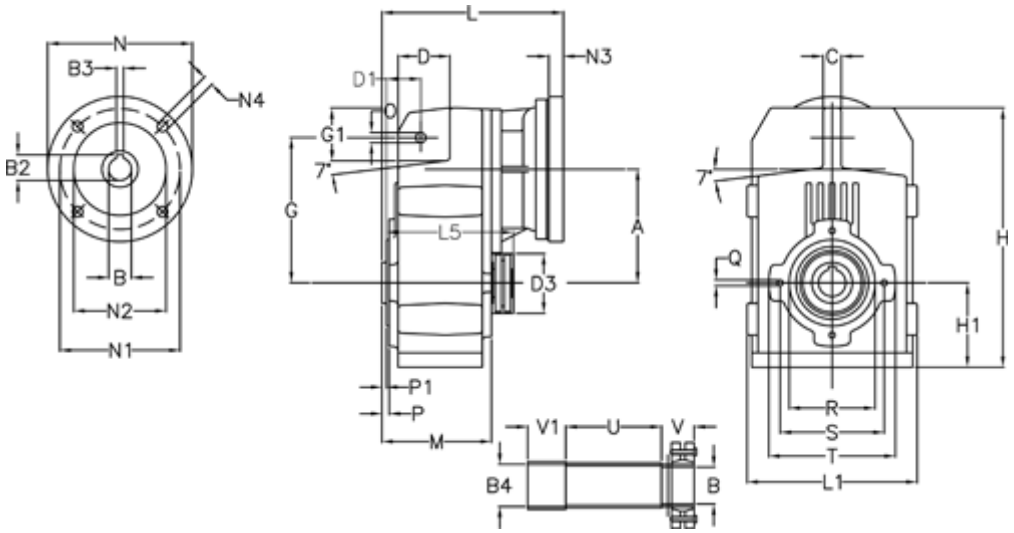

A = 112.50	D1 = 35.0	l5 = 159.5	P1 = 3.0	V1 = 36
B = 25	d3 = 77	M = 100.5	Q = M8x12	
B1 = 11	G = 140	N = 140	R = 80	
B2 = 12.8	G1 = 51.0	N1 = 115	S = 100	
B3 = 4	H = 251.0	N2 = 95	T = 120	
B4 = 27	H1 = 84.0	N4 = M8x19	Tightening torque N m = 8.5	
C = 20	L = 185.5	O = 11	U = 70.0	
D = 47.5	L1 = 170	P = 4.5	V = 34	

Product drawings and brochures of any kind may contain errors for which Brd. Klee A/S cannot be liable.